EXPERIMENT 7

COMMON EMITTER BJT AMPLIFIER

7.1 Objectives

In this experiment, study principle of common emitter BJT amplifier circuit will be examined.

7.2 Equipment List

1. Signal Generator, DC Supply, Oscilloscope, Multi-meter
2. Transistor (BC547)
3. Resistors (2.2 kΩ, 10 kΩ, 20 kΩ, 56 kΩ, 1 MΩ)
4. Capacitors (5 μF, 4.7 nF, 10 nF, 47 nF, 100 nF)

7.3 Preliminary Work

1. Study "BJT Amplifier" subject. How many types of BJT amplifiers are there?

7.4 Experimental Procedure

1) Construct the circuit given in Fig. 1. Apply the sinusoidal signal of amplitude 100 mVp and frequency 2 kHz to the input. Observe input and output voltage from oscilloscope.

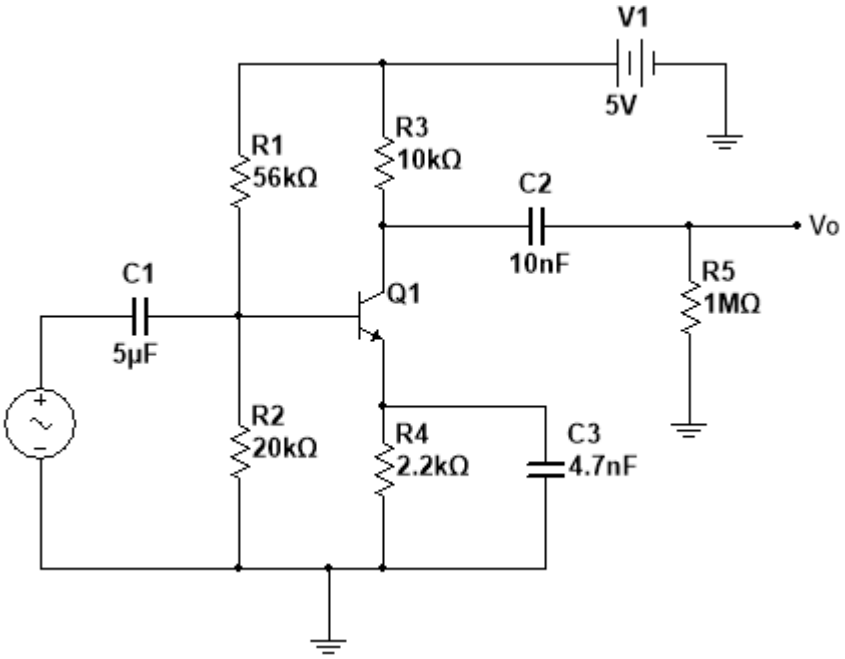

Figure 1. Common Emitter BJT Amplifier

2) Repeat step 1 without C_3 capacitor. Observe and record differences.

3) Change the C_3 capacitor value as 47 nF and 100 nF. Observe and record differences.

Post Lab. Questions

1) What is the purpose of capacitor C_3? Explain.

2) What are the differences between common emitter BJT circuit with and without C_3 capacitor? Explain.

3) How does the capacitor C_3 value affect the output signal? Explain.

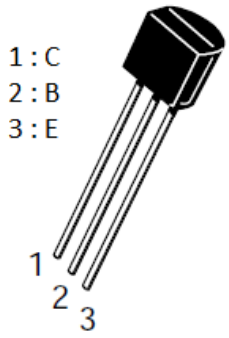

Figure 2. Pin diagram for BC547